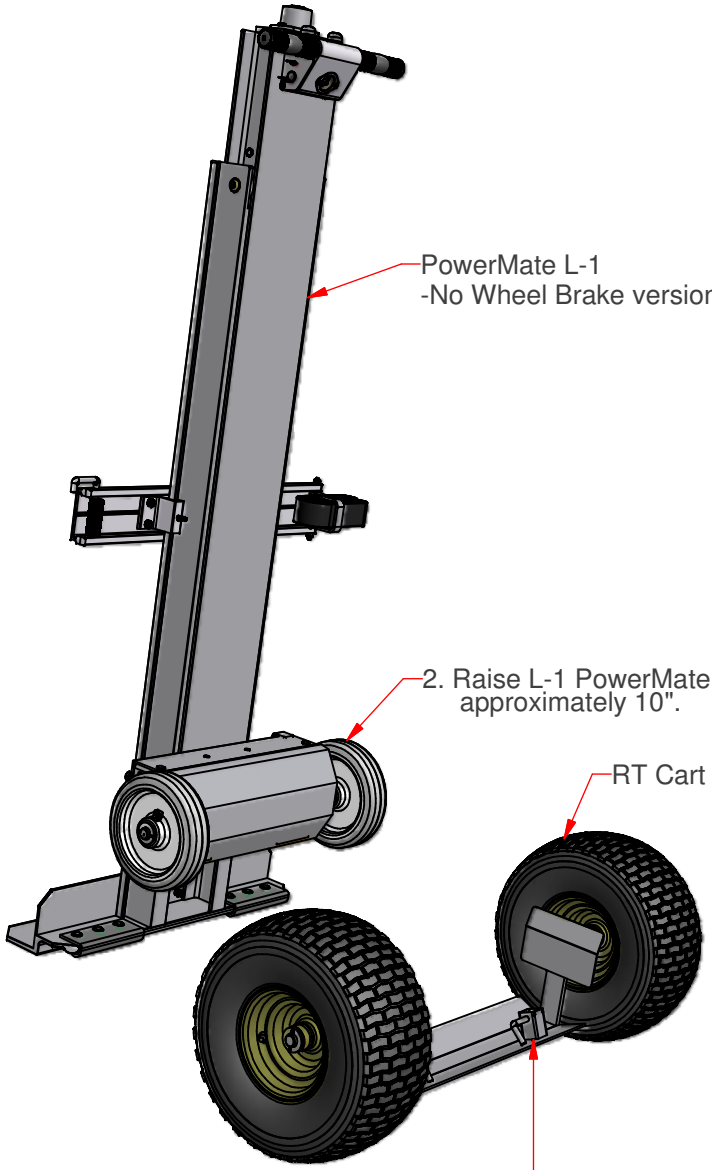

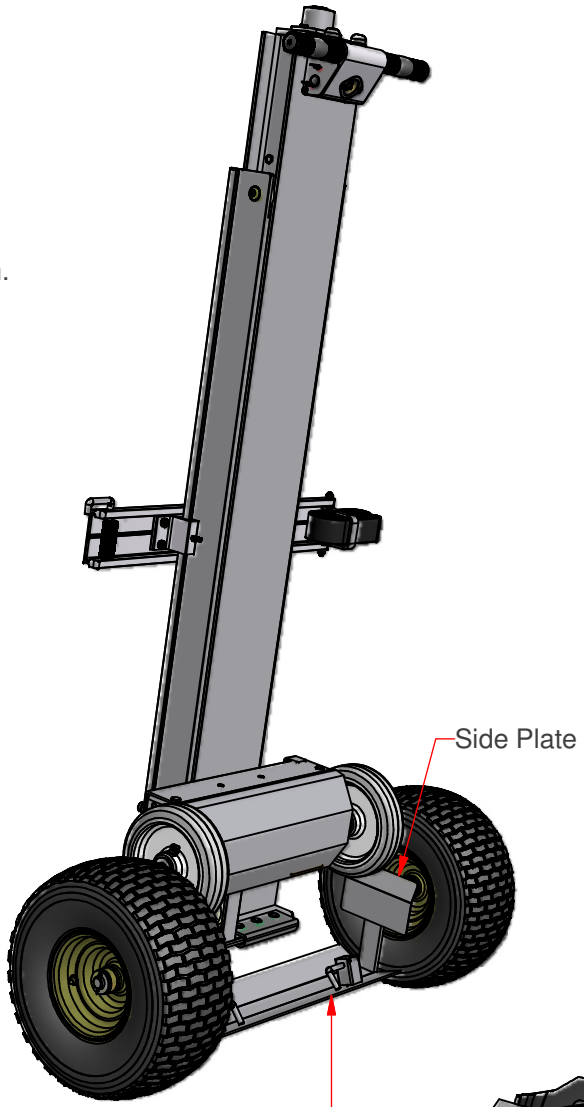

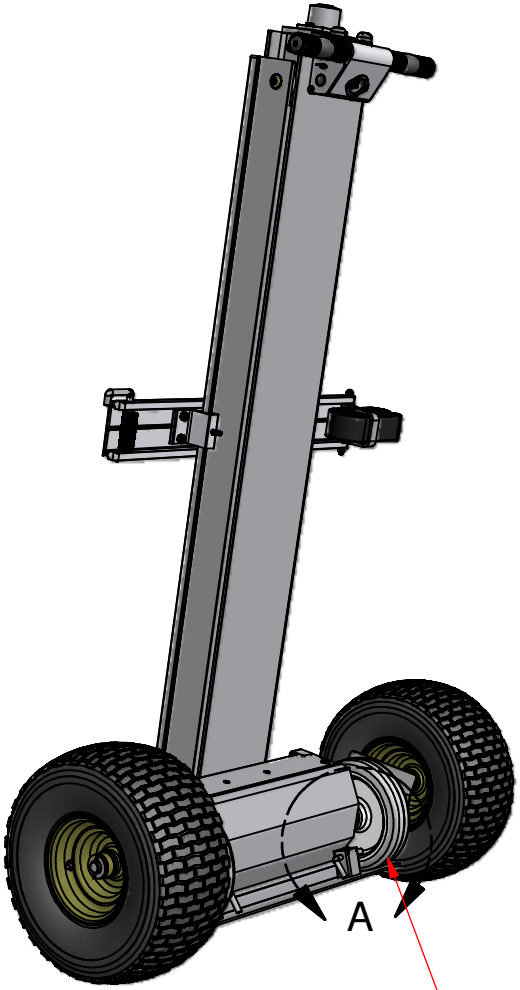

1. Position RT Cart behind the L-1 PowerMate unit with the Locking Pin Stand-offs located towards the rear of the assembly.

3. Position the RT-Cart, using your feet, directly beneath the PowerMate wheels. Center the wheel axle between the Side Plates of the RT-Cart.

4. Lower the PowerMate wheels onto the base of the RT Cart.

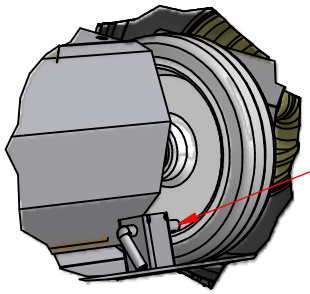

5. Engage Lock Pins into PowerMate wheel hubs.

DETAIL A

RT CART L-1 ATTACHMENT INSTRUCTION

PN 011730C
Assembly 414300
Eng. 11/ 25/ 09